# KHA SLIM 50"

Performance Lighting



Slim area and site lighting series. Fixtures consist of:

- ¬ Multi-step powder-coat painting process, optimized against UV rays and corrosion.
- ¬ Copper-free aluminum extruded post.
- ¬ Copper-free precision die-cast aluminum housing and top cap.
- ¬ Corrosion-resistant AISI 316 stainless steel post and top cap.
- ¬ Satin UV-stabilized diffuser.
- ¬ Custom molded, anti-aging gasket(s).
- ¬ Stainless steel external hardware.
- ¬ Custom MCPCB utilized to maximize heat dissipation and promote long LED life.
- ¬ Diffuse light emission.
- ¬ IESNA Type V light distribution.
- ¬ Input voltage: 120-277 V (50 / 60 Hz), integral driver.
- ¬ Anchor bolts available for bollards (ordered separately).
- ¬ Suitable for most coastal applications (stainless steel versions).
- ¬ Five optional finishes available. Add finish suffix to any part number for textured Black (BK-81), Iron gray (AN-96), Aluminum metallic (GR-94), White (WH-87), Iron rust (RB-10) when not standard.
- ¬ Consult factory for dimming options, marine-grade, custom finishes (please specify RAL color), and non-cataloged CCT (Kelvin) options including static colors.
- ¬ Consult factory for custom post height options.
- ¬ Consult factory for HSS and other Shield options.
- ¬ 5-year warranty.
- ¬ Marine Grade finish.
- ¬ Suitable for Natatorium applications.

IP 66 · WET · UL LISTED · 79 · 1-10 V · RAL · IK 08 6 J

## FINISHES

- **AN-96** / Iron gray / Textured
- **BK-81** / Black / Textured
- **GR-94** / Aluminum metallic / Textured
- **WH-87** / White / Textured
- **INOX** / Stainless steel / Matt
- **RB-10** / Iron rust / Textured

KHA SLIM
50”

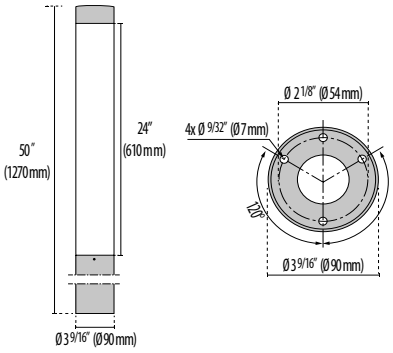


| Lumen Output | Wattage | 4K /80CRI |
|---|---|---|
| 12" Diffuser | 25W max | 2595 lm |
| 24" Diffuser | 50W max | 5190 lm |
| 48" Diffuser | 75W max | 7800 lm |
| Contact factory for other CCT options and reduced lumen | | |

Scan here for installation instructions

Performance in Lighting reserves the rights to make all necessary changes without prior notice.

**Performance in Lighting** - 2621 Keys Pointe - Conyers, Georgia 30013 - USA - voice 770.822.2115 - info.usa@pil.lighting
**www.performanceinlighting.com**

Rev. 09/12/2026

# Order Guide - KHA SLIM 50"

Performance Lighting

| Order code example | **KHA50-38-25W-3K-12-SS-UNV-010V-HSS** |
|---|---|

| Series | Bollard Height | Wattage | CCT | Diffuser Size | Finish | Voltage | Dimming | Options/ Accessories |
|---|---|---|---|---|---|---|---|---|
| **KHA**<br>KHA SLIM 50" | **38**<br>38 inch<br><br>**50**<br>50 inch<br><br>**XX**<br>Specify height must must within range | **25W**<br>25 Watt (12" max)<br><br>**40W**<br>40 Watt<br><br>**50W**<br>50 Watt (24" max)<br><br>**XX**<br>Specify wattage must be below max | 80 CRI std.<br><br>**27K**<br>2700k<br><br>**3K**<br>3000k<br><br>**35K**<br>3500k<br><br>**4K**<br>4000k<br><br>**5K**<br>5000k<br><br>**65K**<br>6500K<br><br>**RED**<br>Static Red<br><br>**BLU**<br>Static Blue<br><br>**GRN**<br>Static Green<br><br>**AMB**<br>Static Turtle Friendly Amber<br><br>**RGBW**<br>RGBW<br>(See details for Control below) | **12**<br>12" diffuser (38" min height and 25W max wattage)<br><br>**24**<br>24" diffuser (50" min height and 50W max wattage)<br><br>For a 48" diffuser option see KHA SLIM 8" | **SS**<br>Stainless Steel<br><br>**AM**<br>Aluminum Metallic<br><br>**IG**<br>Iron Gray<br><br>**IR**<br>Iron Rust<br><br>**BK**<br>Textured Black<br><br>**WH**<br>Textured White<br><br>**CC**<br>Custom Color | **UNV**<br>120-277V | **010V**<br>0-10V Dimming<br><br>**ELV**<br>120V Line-Voltage Dimming Driver | **DB**<br>Direct burial (Must specify DB depth)<br><br>**BT**<br>Bubble trim<br><br>**DIA**<br>Diamond trim<br><br>**GRL**<br>Grill trim<br><br>**PER**<br>Perforated shield full<br><br>**PHSS**<br>Perforated house side shield<br><br>**RBN**<br>Ribbon trim<br><br>**ANG**<br>Angle trim<br><br>**4L**<br>Four line trim<br><br>**2L**<br>Two line trim<br><br>**OCC**<br>Occupancy sensor (Not available with RGBW or with trim option) |

CONSULT FACTORY FOR OTHER AVAILABLE OPTIONS NOT SHOWN ABOVE

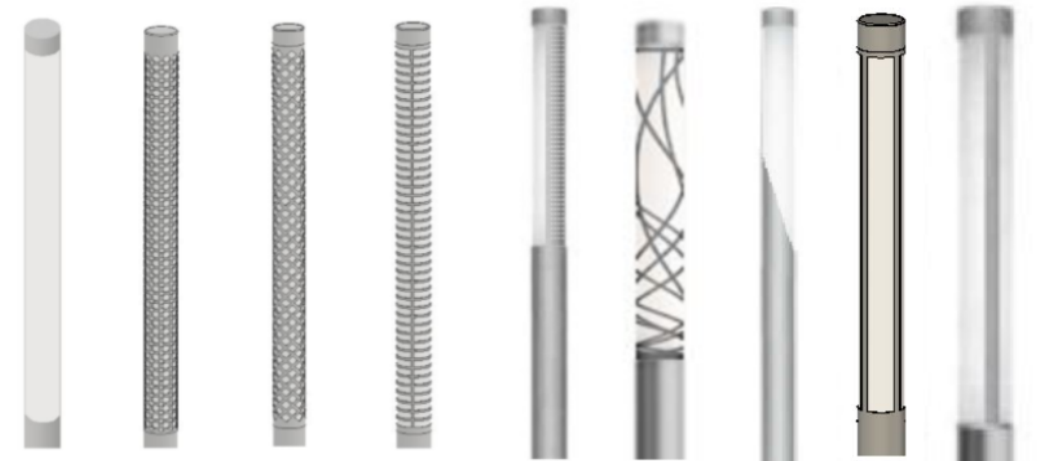

No Trim | Bubble Trim | Diamond Trim | Grill Trim | Perforated House Side Shield | Ribbon Trim | Angle Trim | 4-Line Trim | 2-Line Trim

## Power Supply



**17433**
Kit driver 48V



**17096**
Kit driver 48V WP

## RF Controls



**3104173**
RGBW RF controller 4 channel
(0.35A each CH)



**31041730**
RGBW RF controller WP 4 channel
(0.35A each CH)



**310429**
RGBW hand held remote

## DMX Controls



**178973**
RGBW DMX enabler/decoder
4 channel (0.35A each CH)



**1789730**
RGBW DMX enabler/decoder WP
4 channel (0.35A each CH)



**11015**
Terminating Resistor



**110150**
Terminating Resistor  WP